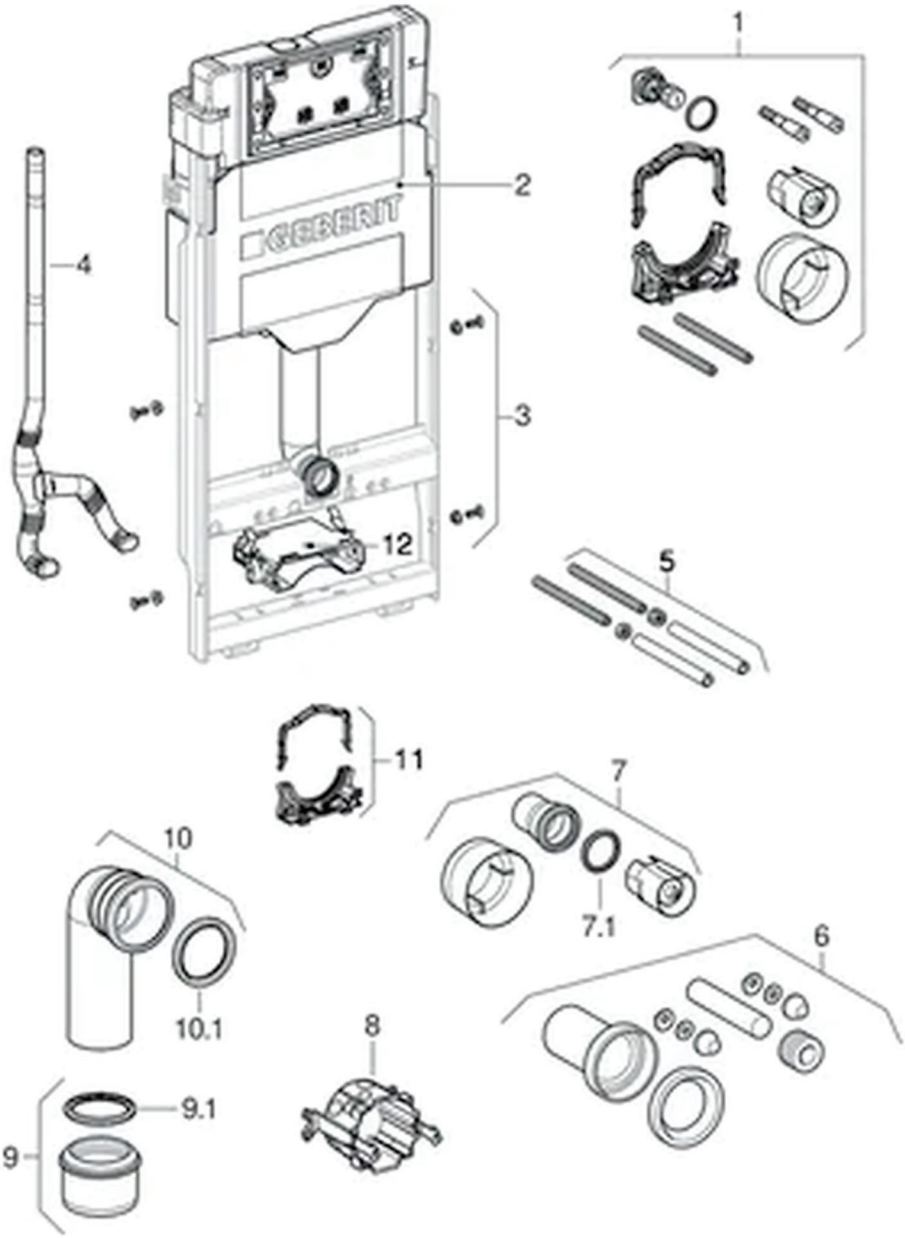

#	Art.-Nr.
1	241.871.00.2
2	
3	461.006.00.1
5	240.189.00.1
6	
7	240.303.00.2
7.1	362.771.00.1
9.1	387.282.00.1
10	366.061.16.1
10	367.070.16.1
10.1	387.282.00.1
11	242.012.00.2